THIS DRAWING IS UNPUBLISHED. RELEASED FOR PUBLICATION -.- .
© COPYRIGHT - BY TYCO ELECTRONICS CORPORATION. ALL RIGHTS RESERVED.

LOC	DIST
AD	00

REVISIONS

P	LTR	DESCRIPTION	DATE	DWN	APVD
	J	EC 0G3C 0220 05	18JUN05	BSV	JLG

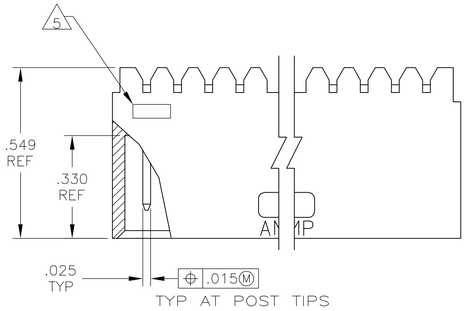

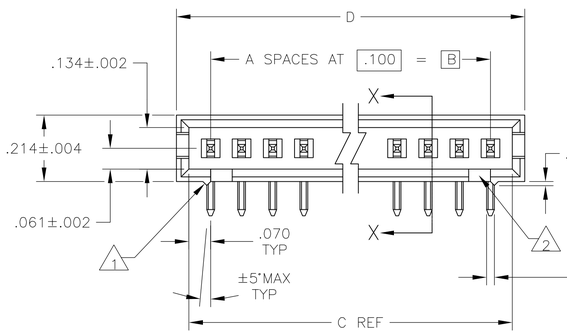

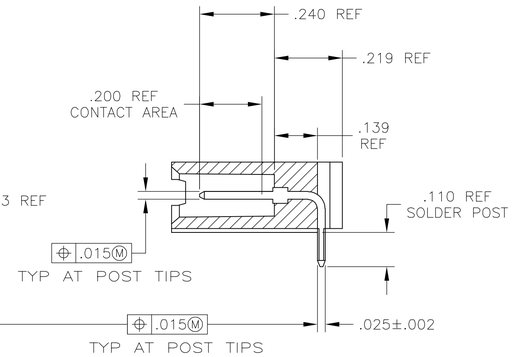

SECTION X—X

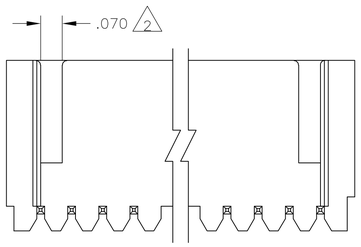

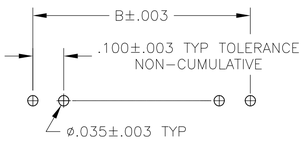

RECOMMENDED HOLE LAYOUT
FOR MANUAL INSERTION

1. STANDOFFS: UP TO 9 POS-(2 REQD) ON THE OUTSIDE ENDS OF THE HOUSING
   10 TO 19 POS-(3 REQD) TWO ON THE OUTSIDE ENDS AND ONE CENTERED ON THE HOUSING
   19 POS AND LARGER-(4 REQD) TWO ON THE OUTSIDE ENDS AND TWO SPACED EVENLY WITHIN THE REMAINING LENGTH OF THE HOUSING
2. FOR 3 POSITION ONE SLOT, .215 WIDE.
3. .000030 GOLD IN CONTACT AREA, .000100-.000200 MATTE TIN-LEAD IN SOLDER AREA, OVER .000050 NICKEL ON ENTIRE CONTACT.
4. .000030 GOLD IN CONTACT AREA, .000100-.000200 MATTE TIN IN SOLDER AREA, OVER .000050 NICKEL ON ENTIRE CONTACT.
5. AMP LOGO MOLDED IN HOUSING.
   DATE CODE TO BE HOT EMBOSSED ON HOUSING.
   AMP PART NUMBER AND CUSTOMER PART NUMBER TO BE INK STAMPED WITH .062±.015 HIGH CHARACTERS.
6. HOUSING: FLAME RETARDANT THERMOPLASTIC, COLOR-BLACK.
   POST: PHOS-BRONZE.

	CUSTOMER PART NUMBER	FINISH	D	C	B	A	NO OF POS	ASSEMBLY PART NUMBER
	731W10331	4	.420	.340	.200	2	3	8-102369-4
	731W10331	3	.420	.340	.200	2	3	3-102369-4
OBSOLETE	-	3	3.720	3.640	3.500	35	36	3-102369-3
OBSOLETE	-	3	3.620	3.540	3.400	34	35	3-102369-2
OBSOLETE	-	3	3.520	3.440	3.300	33	34	3-102369-1
OBSOLETE	-	3	3.420	3.340	3.200	32	33	3-102369-0
OBSOLETE	-	3	3.320	3.240	3.100	31	32	2-102369-9
OBSOLETE	-	3	3.220	3.140	3.000	30	31	2-102369-8
OBSOLETE	-	3	3.120	3.040	2.900	29	30	2-102369-7
OBSOLETE	-	3	3.020	2.940	2.800	28	29	2-102369-6
OBSOLETE	-	3	2.920	2.840	2.700	27	28	2-102369-5
OBSOLETE	-	3	2.820	2.740	2.600	26	27	2-102369-4
OBSOLETE	-	3	2.720	2.640	2.500	25	26	2-102369-3
OBSOLETE	-	3	2.620	2.540	2.400	24	25	2-102369-2
OBSOLETE	-	3	2.520	2.440	2.300	23	24	2-102369-1
OBSOLETE	-	3	2.420	2.340	2.200	22	23	2-102369-0
OBSOLETE	-	3	2.320	2.240	2.100	21	22	1-102369-9
OBSOLETE	-	3	2.220	2.140	2.000	20	21	1-102369-8
OBSOLETE	-	3	2.120	2.040	1.900	19	20	1-102369-7
OBSOLETE	-	3	2.020	1.940	1.800	18	19	1-102369-6
OBSOLETE	-	3	1.920	1.840	1.700	17	18	1-102369-5
OBSOLETE	-	3	1.820	1.740	1.600	16	17	1-102369-4
OBSOLETE	-	3	1.720	1.640	1.500	15	16	1-102369-3
OBSOLETE	-	3	1.620	1.540	1.400	14	15	1-102369-2
OBSOLETE	-	3	1.520	1.440	1.300	13	14	1-102369-1
OBSOLETE	-	3	1.420	1.340	1.200	12	13	1-102369-0
OBSOLETE	-	3	1.320	1.240	1.100	11	12	102369-9
OBSOLETE	-	3	1.220	1.140	1.000	10	11	102369-8
	731W11031	3	1.120	1.040	.900	9	10	102369-7
OBSOLETE	-	3	1.020	.940	.800	8	9	102369-6
OBSOLETE	731W10831	3	.920	.840	.700	7	8	102369-5
OBSOLETE	-	3	.820	.740	.600	6	7	102369-4
SUPERSEDED BY 103361-4	713W10631	3	.720	.640	.500	5	6	102369-3
	713E10531	3	.620	.540	.400	4	5	102369-2
SUPERSEDED BY 103361-2	713W10431	3	.520	.440	.300	3	4	102369-1

THIS DRAWING IS A CONTROLLED DOCUMENT.

DIMENSIONS: INCHES

TOLERANCES UNLESS OTHERWISE SPECIFIED:
0 PLC ± -
1 PLC ± -
2 PLC ± -
3 PLC ± .005
4 PLC ± -
ANGLES ± -

MATERIAL 6
FINISH 3 4 7

DWN E. BRANDBURG 13JAN97
CHK -
APVD S. SHUEY 13JAN97
PRODUCT SPEC —
APPLICATION SPEC —
WEIGHT —

Tyco Electronics Corporation
Harrisburg, Pa 17105-3608

NAME ASSEMBLY, MOD II, HEADER, SINGLE ROW, .100 C/L, RIGHT ANGLE, WITH .025 SQ POST

SIZE	CAGE CODE	DRAWING NO	RESTRICTED TO
A1	00779	C-102369	—

CUSTOMER DRAWING | SCALE 4:1 | SHEET 1 OF 1 | REV J